1968-69 Pontiac GTO Hideaway Front Vacuum Hose Kit

INL11096

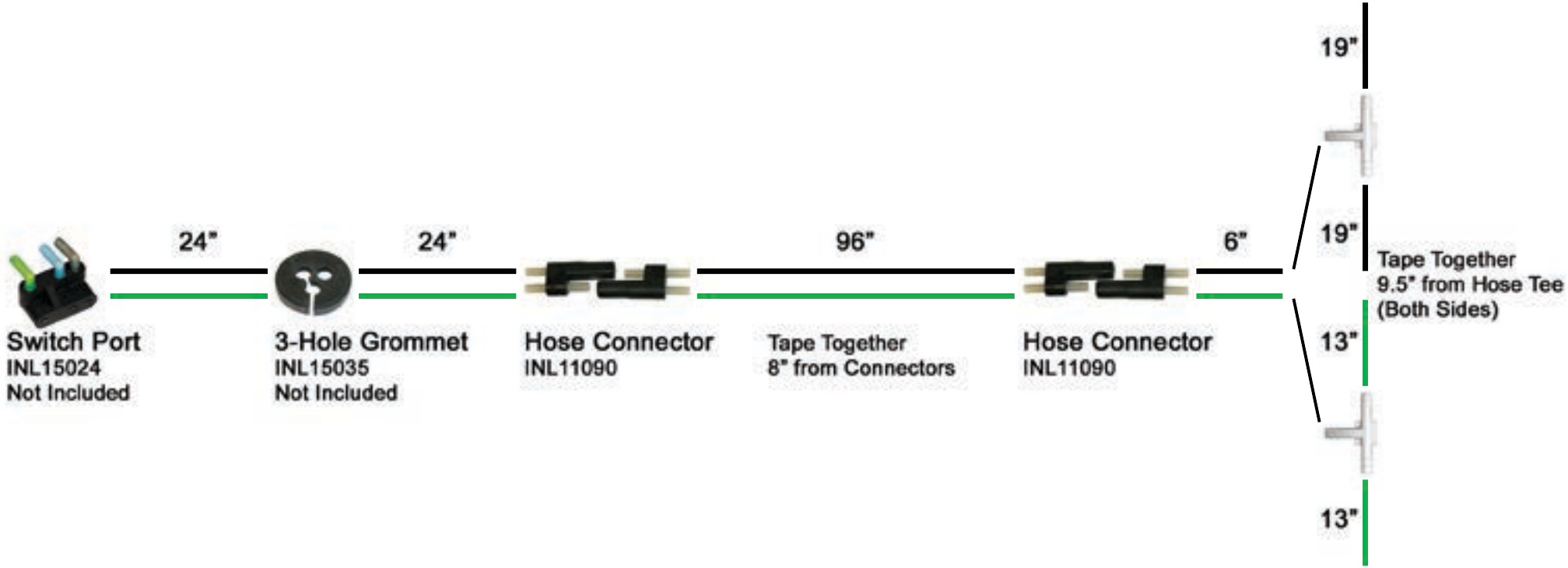

www.inlinetube.com

Images for Identification Purposes - Not to Scale - Revised 2/22/2024

©Inline Tube 2024

1968-69 Pontiac GTO Hideaway Front Vacuum Hose Kit

INL11096

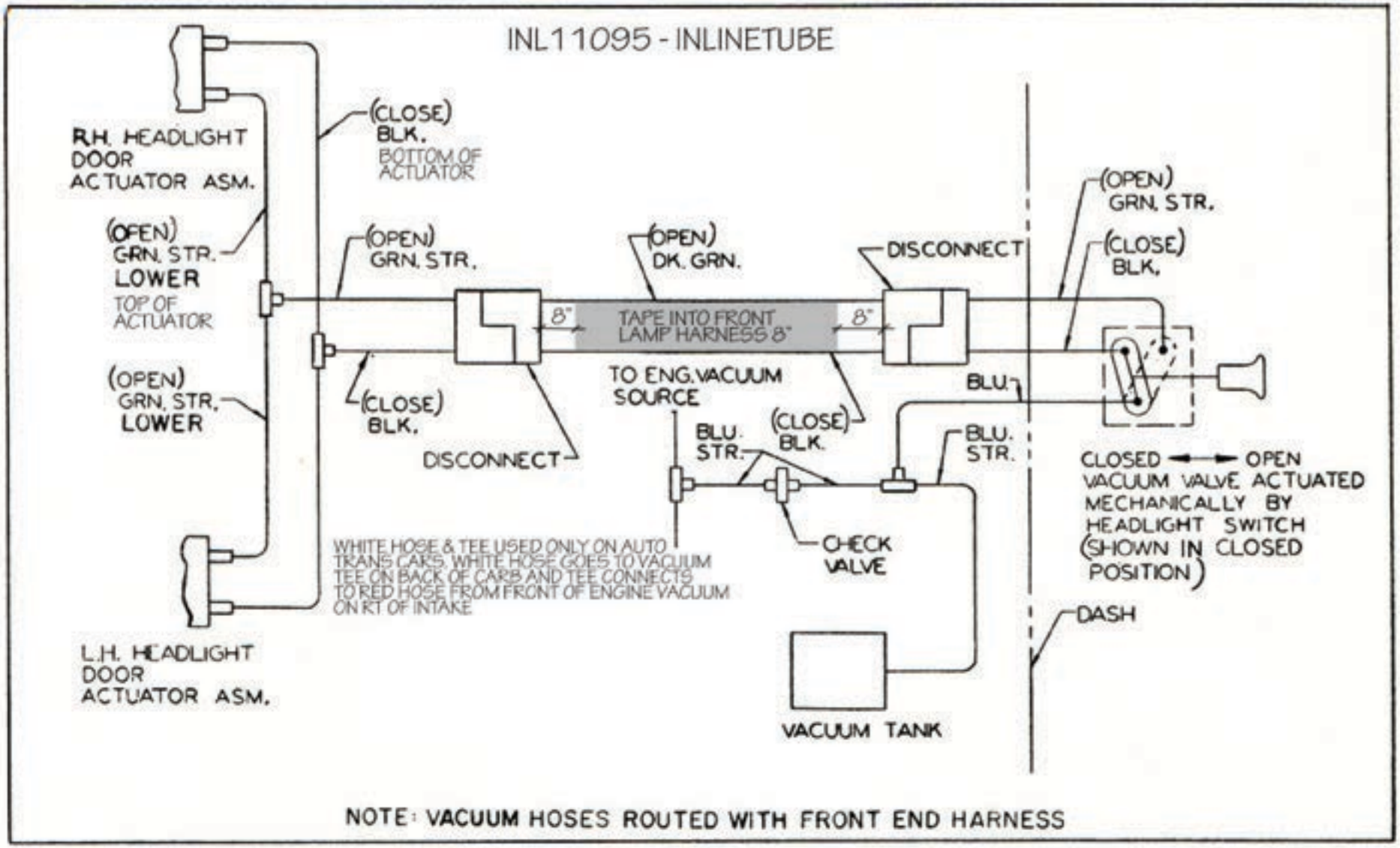

Fig. 12-41 Vacuum Operated Headlamp Door Schematic

©Inline Tube 2024